All dimensions are in millimeters (mm)

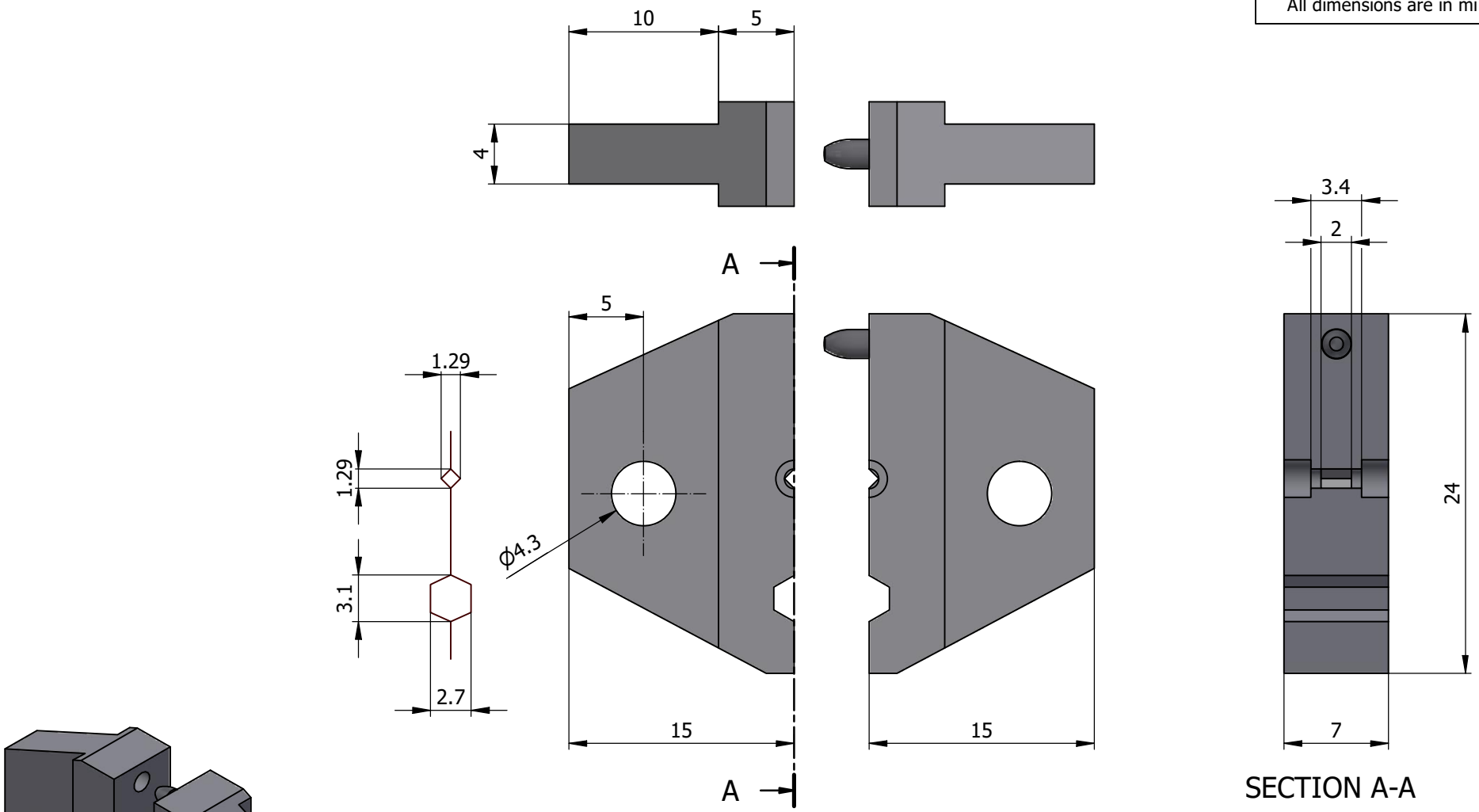

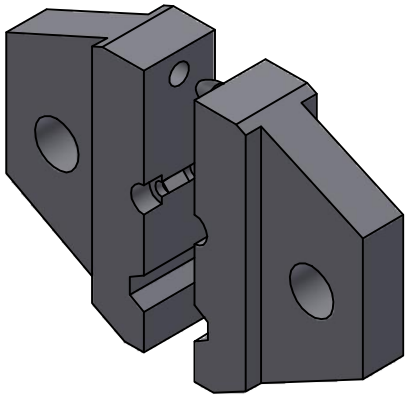

All additional information are documented on the datasheet (See below link or QR Code)
www.lemo.com/pdf/DPN.99.123.1K.pdf

Datasheet

Crimping dies sub-assembly

For DPE.99.000.00

Drawn	03.10.2025	JMIG/OBAR
Checked	26.06.2026	OBAR
Modified	01	26.06.2026/MARI
	DO NOT SCALE DRAWING	

LEMO SA
Chemin des Champs-Courbes 28
1024 Ecublens - SWITZERLAND
Tel. (+41) 21 695 16 00
email : info@lemo.com
www.lemo.com

CD

DPN.99.123.1K