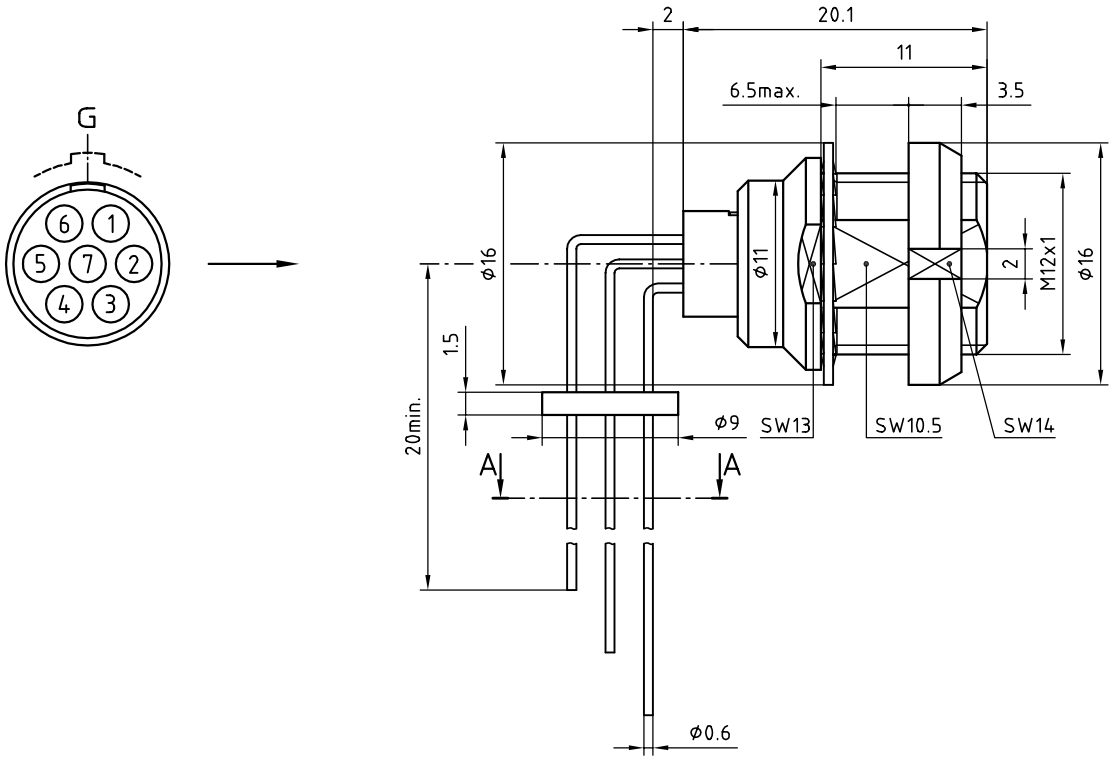

Outer shell	: Brass (UNS C38500)	Chrome plated (FS-QQ-C-320B)
Earthing crown	: Bronze (UNS C54400)	Nickel plated (FS-QQ-N-290A)
Insulator	: PEEK	-
Female contact	: Bronze (UNS C54400)	Gold plated (ISO 4523)
Clip	: Steel	-
Notched nut	: Brass (UNS C38500)	Chrome plated (FS-QQ-C-320B)
Locking washer	: Bronze (UNS C52100)	Nickel plated (FS-QQ-N-290A)
Other metallic parts	: Brass (UNS C38500)	Nickel plated (FS-QQ-N-290A)
Contact wire	: Bronze (UNS C27400)	Tinned
Position insert	: POM	-
Fixing resin	: Epoxy	-

Panel cut-out

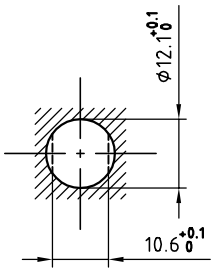

Torque for mounting nut : 4.5 Nm

A-A cross-section
(PCB drilling pattern)

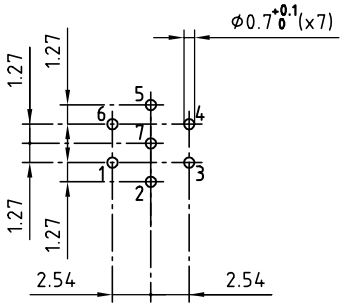

Spanner for notched nut : DCH.91.161.PA

Fixed socket , nut fixing , with key (G) , with 90° contacts for PCB . (Back panel monting) .
Series 1B , multipole (7)

ETUDE N°

Echelle	Dessiné	15.03.90	MR / RMO
—	Contrôle	14.07.00	RMO / JPBA
	Modif.	03	14.07.00 / OVU

LEMO SA CH-1024 Ecublens

EEG.1B.307.CLV