All dimensions are in millimeters (mm)

Alignment Key
Front View

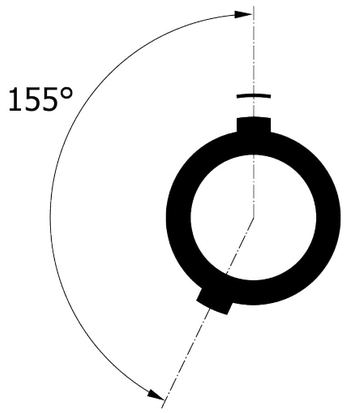

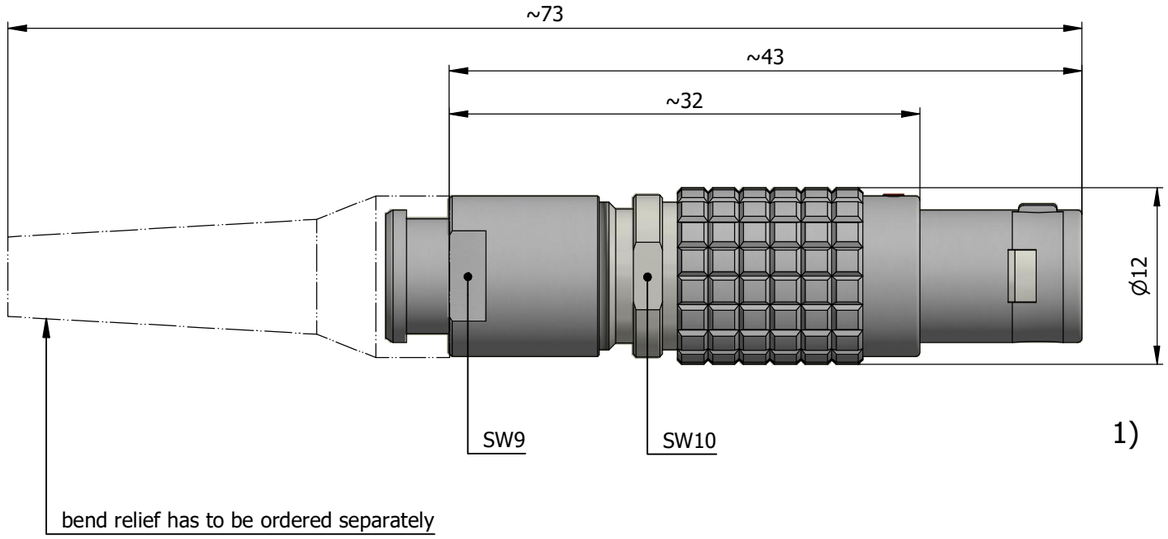

Insert Configuration
Rear View

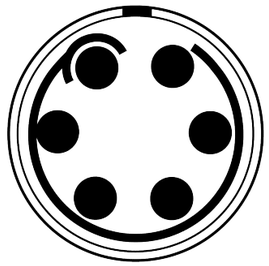

Model | Alignment Key | Series | Insert Config. | Housing | Insulator | Contact | Collet Type | Cable Ø | Variant

FGF.1B.306.CLAD62Z

Note:

1) This picture is generic and for illustrative purposes only, and may show different keying, materials, colour, finish, and contact configuration. Minor shape or feature variations to actual item may be present.

All additional information are documented on the datasheet (See below link or QR Code)
www.lemo.com/pdf/FGF.1B.306.CLAD62Z.pdf

Datasheet

Straight plug, cable collet and nut for fitting a bend relief
Series 1B

Drawn	18.11.2024	MARI/MARI
Checked	18.11.2024	OBAR
Modified	00	18.11.2024/MARI
DO NOT SCALE DRAWING		

LEMO SA
Chemin des Champs-Courbes 28
1024 Ecublens - SWITZERLAND
Tel. (+41 21) 695 16 00
email : info@lemo.com
www.lemo.com

CD

FGF.1B.306.CLAD62Z