All dimensions are in millimeters (mm)

Alignment Key
Front View

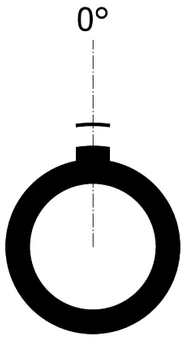


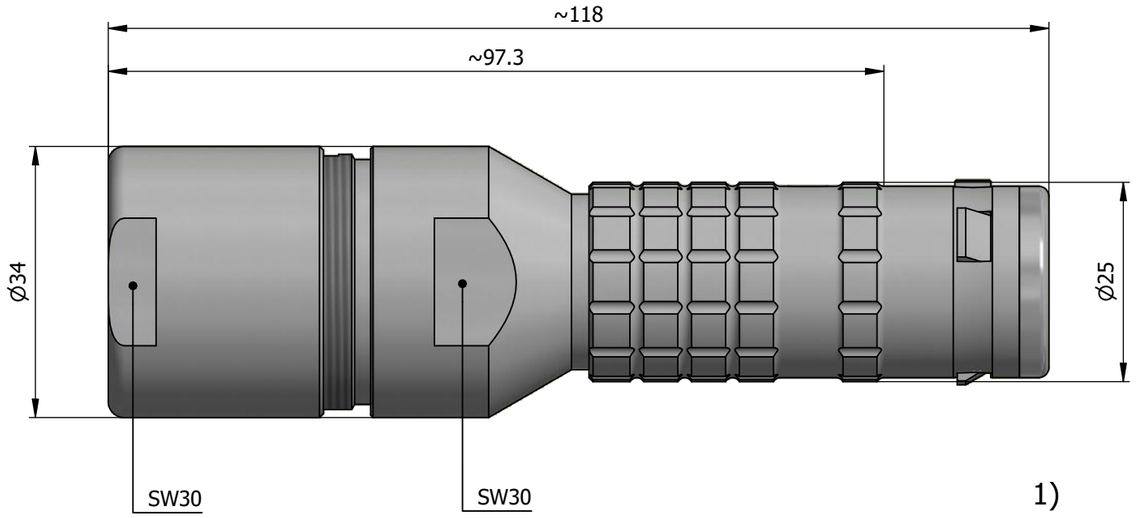


1)

Insert Configuration
Rear View

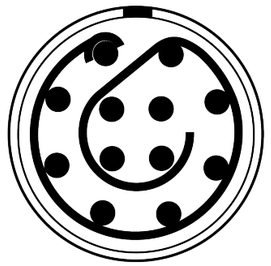

Note:

1) This picture is generic and for illustrative purposes only, and may show different keying, materials, colour, finish, and contact configuration. Minor shape or feature variations to actual item may be present.

All additional information are documented on the datasheet (See below link or QR Code)
www.lemo.com/pdf/FGG.4K.312.CLAK21.pdf

Model | Alignment Key | Series | Insert Config. | Housing | Insulator | Contact | Collet Type | Cable Ø | Variant

FGG.4K.312.CLAK21

Datasheet

**Straight plug, oversize cable collet**
Series 4K

| | | |
|---|---|---|
| Drawn | 06.12.2022 | MARI/MARI |
| Checked | 06.12.2022 | OBAR |
| Modified | 00 | 06.12.2022/MARI |
| | DO NOT SCALE DRAWING | |

LEMO SA
Chemin des Champs-Courbes 28
1024 Ecublens - SWITZERLAND
Tel. (+41 21) 695 16 00
email : info@lemo.com
www.lemo.com

CD

**FGG.4K.312.CLAK21**