All dimensions are in millimeters (mm)

Alignment Key
Front View

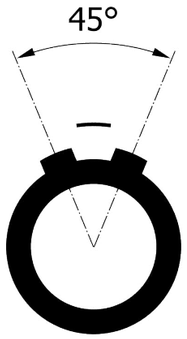

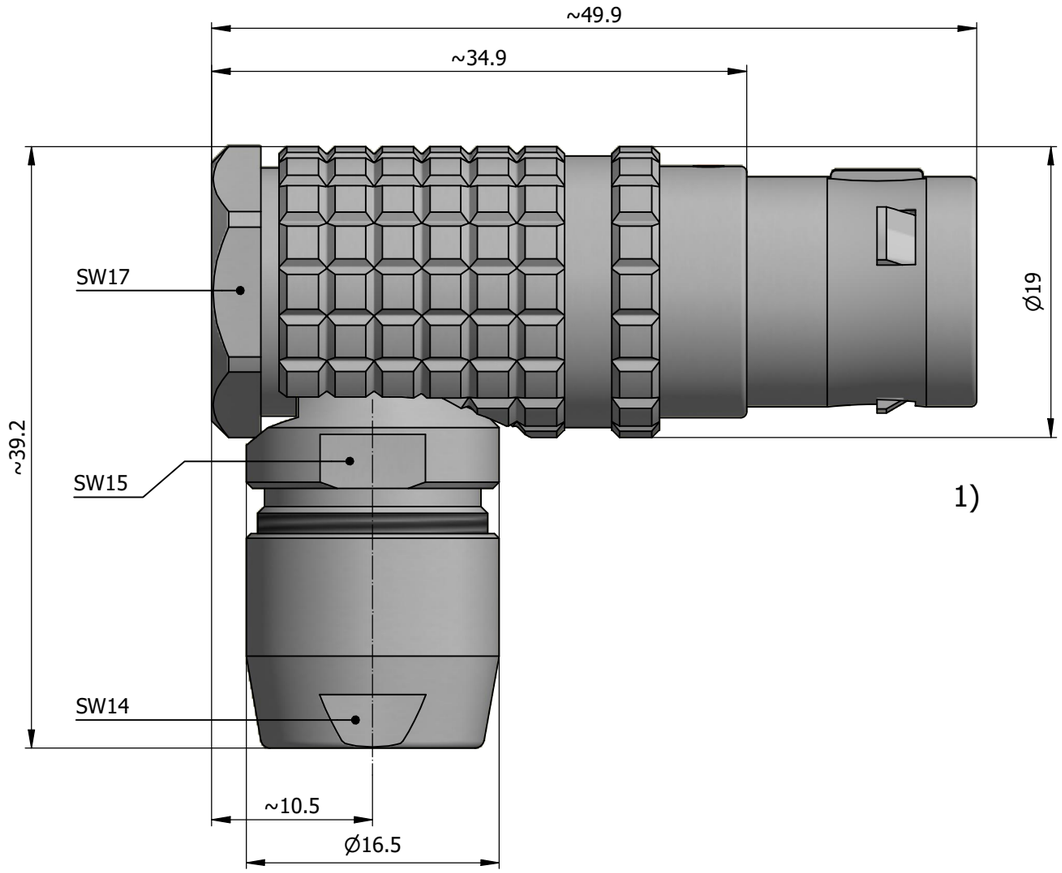

Insert Configuration
Rear View

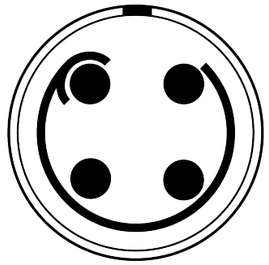

Note:

1) This picture is generic and for illustrative purposes only, and may show different keying, materials, colour, finish, and contact configuration. Minor shape or feature variations to actual item may be present.

All additional information are documented on the datasheet (See below link or QR Code)
www.lemo.com/pdf/FHB.3B.304.CLAD11.pdf

Model	Alignment Key	Series	Insert Config.	Housing	Insulator	Contact	Collet Type	Cable Ø	Variant
FHB.	3B.	304.	CLAD11						

Datasheet

Elbow (90°) plug with cable collet
Series 3B

Drawn	16.12.2024	MARI/MARI
Checked	16.12.2024	OBAR
Modified	00	16.12.2024/MARI
DO NOT SCALE DRAWING		

LEMO SA
Chemin des Champs-Courbes 28
1024 Ecublens - SWITZERLAND
Tel. (+41 21) 695 16 00
email : info@lemo.com
www.lemo.com

CD

FHB.3B.304.CLAD11