All dimensions are in millimeters (mm)

Alignment Key
Front View

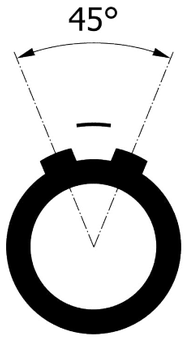

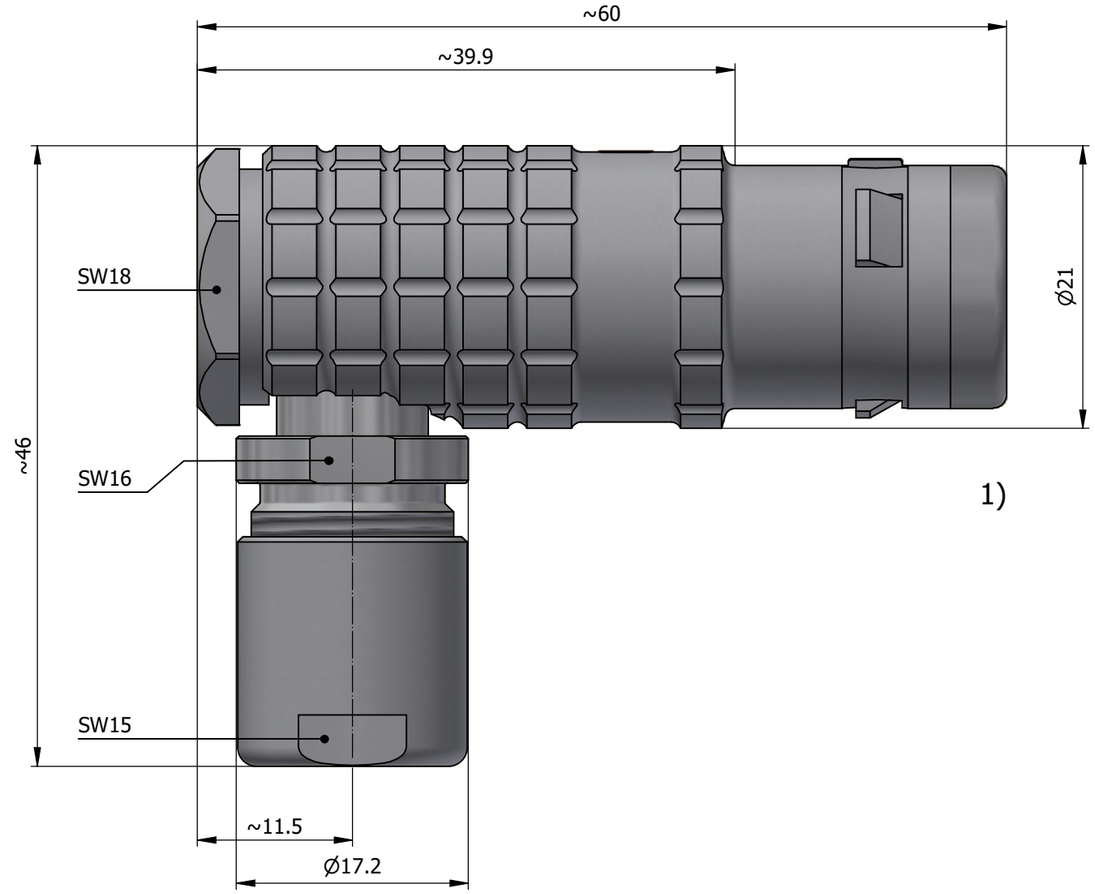

Insert Configuration
Rear View

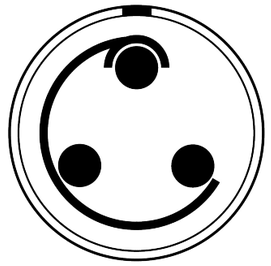

Note:

1) This picture is generic and for illustrative purposes only, and may show different keying, materials, colour, finish, and contact configuration. Minor shape or feature variations to actual item may be present.

All additional information are documented on the datasheet (See below link or QR Code)
www.lemo.com/pdf/FHB.3K.303.CLAC45.pdf

Model	Alignment Key	Series	Insert Config.	Housing	Insulator	Contact	Collet Type	Cable Ø	Variant
FHB.	3K.	303.	CLAC45						

Datasheet

Elbow (90°) plug with cable collet
Series 3K

Drawn	17.12.2024	MARI/MARI
Checked	17.12.2024	MARI
Modified	00	17.12.2024/MARI
	DO NOT SCALE DRAWING	

LEMO SA
Chemin des Champs-Courbes 28
1024 Ecublens - SWITZERLAND
Tel. (+41 21) 695 16 00
email : info@lemo.com
www.lemo.com

CD

FHB.3K.303.CLAC45