All dimensions are in millimeters (mm)

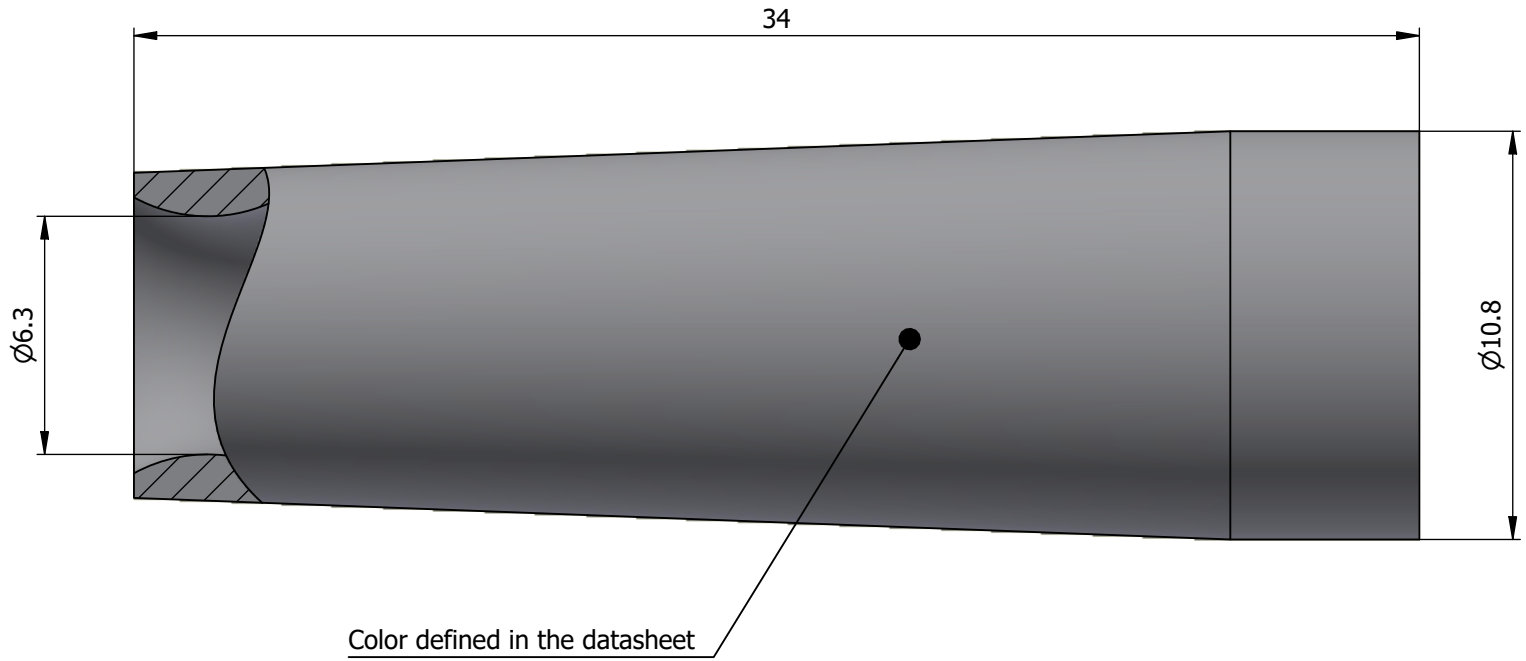

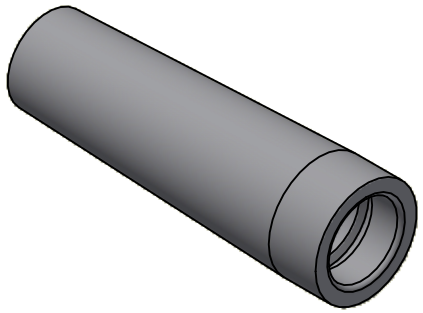

All additional information are documented on the datasheet (See below link or QR Code)
www.lemo.com/pdf/GMA.1B.063.RR.pdf

Datasheet

Bend relief (Silicone), for cable Ø6.3min.-Ø7.0max.

Series 1B

Drawn	27.05.2008	OVU/RMO
Checked	20.09.2024	OBAR
Modified	02	20.09.2024/MARI
	DO NOT SCALE DRAWING	

LEMO SA
Chemin des Champs-Courbes 28
1024 Ecublens - SWITZERLAND
Tel. (+41) 21 695 16 00
email : info@lemo.com
www.lemo.com

CD

GMA.1B.063.RR