All dimensions are in millimeters (mm)

Alignment Key
Front View

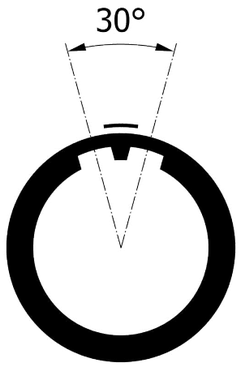

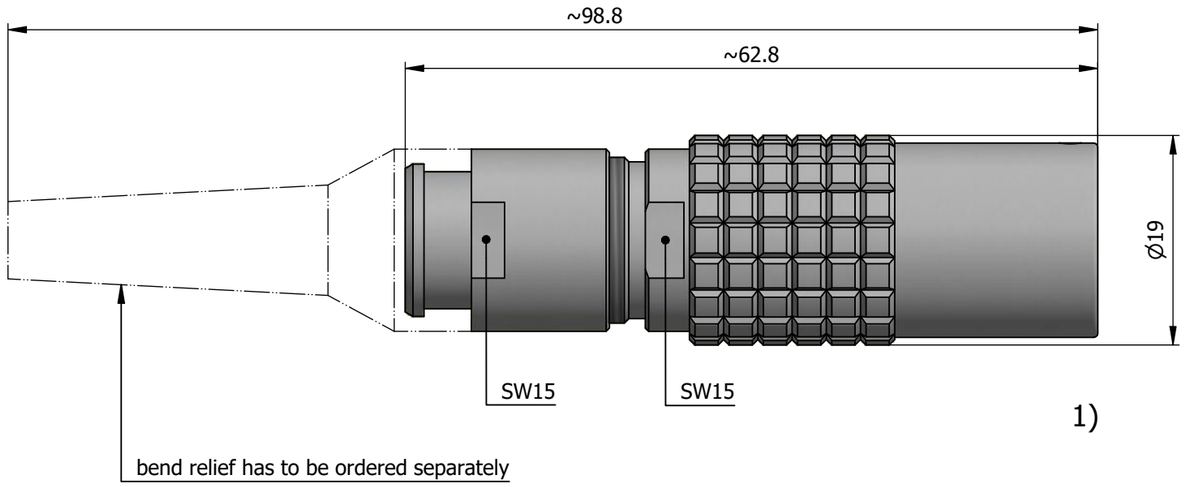

1)

Insert Configuration
Rear View

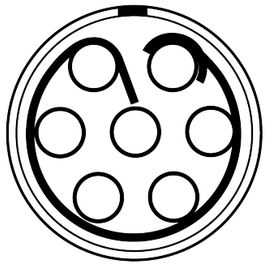

Note:

1) This picture is generic and for illustrative purposes only, and may show different keying, materials, colour, finish, and contact configuration. Minor shape or feature variations to actual item may be present.

All additional information are documented on the datasheet (See below link or QR Code)
www.lemo.com/pdf/PHA.3B.307.CLLD72Z.pdf

Model	Alignment Key	Series	Insert Config.	Housing	Insulator	Contact	Collet Type	Cable Ø	Variant
PHA.	3B.	307.	CLLD72Z						

Datasheet

Free socket, cable collet and nut for fitting a bend relief
Series 3B

Drawn	08.07.2022	MARI/MARI
Checked	08.07.2022	MARI
Modified	00	08.07.2022/MARI
	DO NOT SCALE DRAWING	

LEMO SA
Chemin des Champs-Courbes 28
1024 Ecublens - SWITZERLAND
Tel. (+41 21) 695 16 00
email : info@lemo.com
www.lemo.com

CD

PHA.3B.307.CLLD72Z