All dimensions are in millimeters (mm)

Alignment Key
Front View

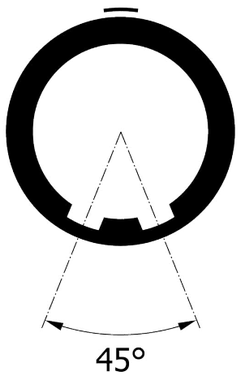

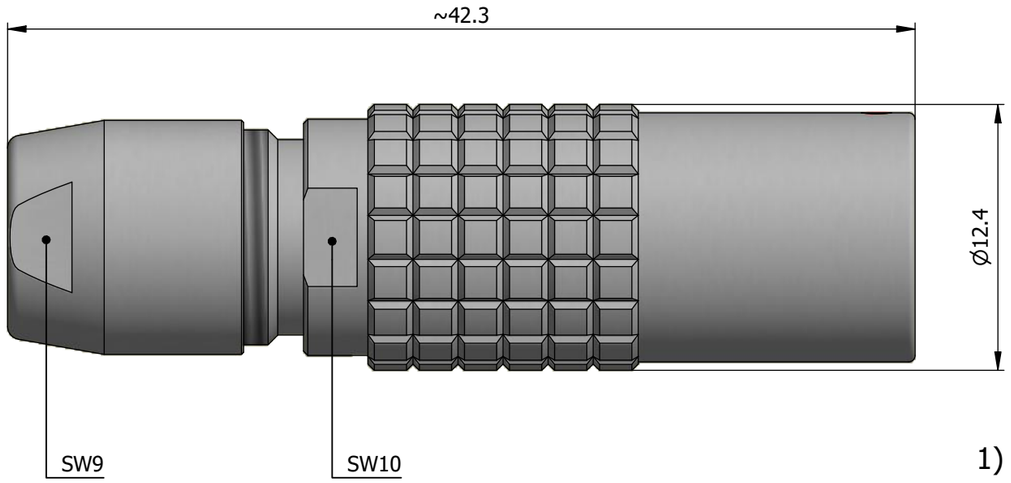

1)

Insert Configuration
Rear View

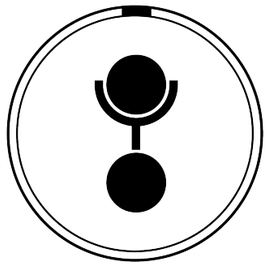

Note:

1) This picture is generic and for illustrative purposes only, and may show different keying, materials, colour, finish, and contact configuration. Minor shape or feature variations to actual item may be present.

All additional information are documented on the datasheet (See below link or QR Code)
www.lemo.com/pdf/PHJ.1B.302.CLAD42.pdf

Model	Alignment Key	Series	Insert Config.	Housing	Insulator	Contact	Collet Type	Cable Ø	Variant
PHJ	.	1B	. 302	.			CLAD42		

Datasheet

Free socket, cable collet
Series 1B

LEMO SA
Chemin des Champs-Courbes 28
1024 Ecublens - SWITZERLAND
Tel. (+41 21) 695 16 00
email : info@lemo.com
www.lemo.com

Drawn	07.07.2022	MARI/MARI
Checked	07.07.2022	OBAR
Modified	00	07.07.2022/MARI
DO NOT SCALE DRAWING		

CD

PHJ.1B.302.CLAD42